Cambridge Assessment International Education

Cambridge IGCSE™

PHYSICS **0625/22**

Paper 2 Multiple Choice (Extended) **February/March 2021**

45 minutes

You must answer on the multiple choice answer sheet.

You will need: Multiple choice answer sheet
Soft clean eraser
Soft pencil (type B or HB is recommended)

INSTRUCTIONS

- There are **forty** questions on this paper. Answer **all** questions.
- For each question there are four possible answers **A**, **B**, **C** and **D**. Choose the **one** you consider correct and record your choice in soft pencil on the multiple choice answer sheet.
- Follow the instructions on the multiple choice answer sheet.
- Write in soft pencil.
- Write your name, centre number and candidate number on the multiple choice answer sheet in the spaces provided unless this has been done for you.
- Do **not** use correction fluid.
- Do **not** write on any bar codes.
- You may use a calculator.
- Take the weight of 1.0 kg to be 10 N (acceleration of free fall = 10 m / s^2).

INFORMATION

- The total mark for this paper is 40.
- Each correct answer will score one mark.
- Any rough working should be done on this question paper.

This document has **16** pages.

IB21 03_0625_22/3RP
© UCLES 2021

[Turn over

www.root19.com +91 - 9969 353 391

1 A student has a measuring cylinder containing water and also has a balance.

Which of these could she use to find the volume of a small metal sphere?

She has no other apparatus.

A either the measuring cylinder containing water or the balance

B the measuring cylinder containing water only

C the balance only

D neither the measuring cylinder nor the balance

2 A ball hits a bat with a velocity of 30 m / s, and leaves the bat travelling with a velocity of 20 m / s in the opposite direction. The ball is in contact with the bat for 0.10 s.

What is the magnitude of the acceleration of the ball whilst it is in contact with the bat?

A 1.0 m / s^2 **B** 5.0 m / s^2 **C** 100 m / s^2 **D** 500 m / s^2

3 A train begins a journey from a station and travels 60 km in a time of 20 minutes.

What is the average speed of the train?

A 3.0 m / s **B** 5.0 m / s **C** 50 m / s **D** 60 m / s

4 Which statement about mass is correct?

A A mass of 10 kg weighs 1 N near the Earth's surface.

B Mass is a gravitational force.

C Mass increases when the gravitational field strength increases.

D The greater the mass of a body, the more it resists a change in its motion.

5 A small bottle has a mass of 20 g when empty. The volume of the bottle is 10 cm^3.

When full of liquid, the total mass is 150 g.

What is the density of the liquid?

A 0.50 g / cm^3 **B** 2.0 g / cm^3 **C** 13 g / cm^3 **D** 15 g / cm^3

6 An object of mass 0.80 kg is moving in a straight line at a velocity of 2.0 m / s. A force is exerted on the object, in the direction of motion, for a period of 1.0 minute and the velocity of the object increases to 6.0 m / s.

What force is exerted on the object?

A 0.053 N **B** 0.080 N **C** 3.2 N **D** 4.8 N

© UCLES 2021
www.root19.com

+91 - 9969 353 391

7 An object moves at constant speed in the circular path shown.

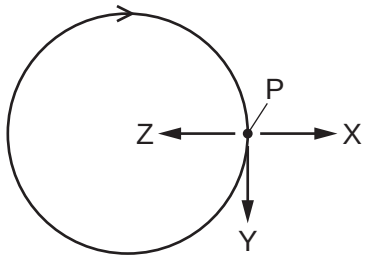

Which statement about the acceleration of the object when it is at point P is correct?

A The acceleration is in the direction of arrow X.

B The acceleration is in the direction of arrow Y.

C The acceleration is in the direction of arrow Z.

D The object is not accelerating.

8 An object is pivoted at point P. A student ties a length of string to a peg on the object. He pulls the string with a force *F*.

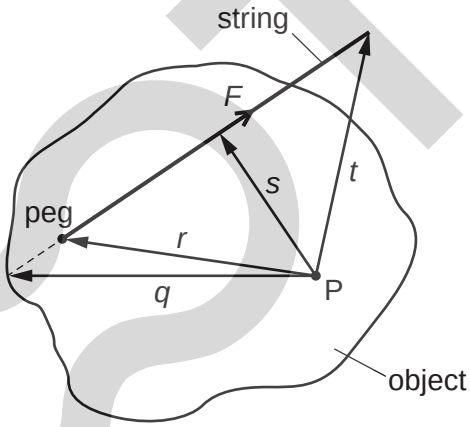

What is the moment of the force *F* about the point P?

A $F \times q$ **B** $F \times r$ **C** $F \times s$ **D** $F \times t$

www.root19.com +91 - 9969 353 591

9 A gas molecule strikes the wall of a container. The molecule rebounds with the same speed.

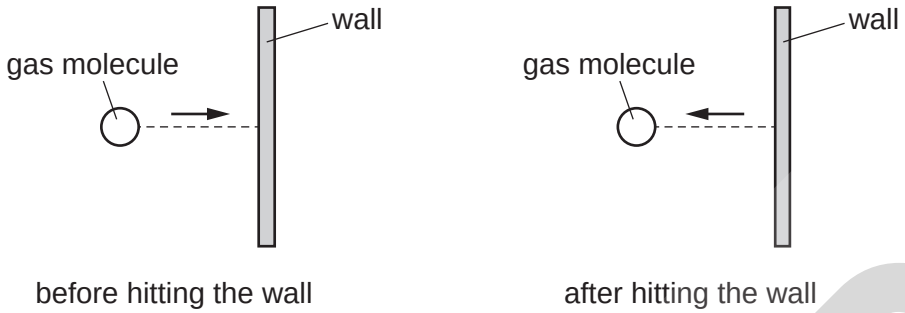

What happens to the kinetic energy and what happens to the momentum of the molecule?

	kinetic energy	momentum
A	changes	changes
B	changes	stays the same
C	stays the same	changes
D	stays the same	stays the same

10 A horizontal force pulls a box along a horizontal surface.

The box gains 30 J of kinetic energy and 10 J of thermal energy is produced by the friction between the box and the surface.

How much work is done by the force?

A 10 J **B** 20 J **C** 30 J **D** 40 J

11 A crane is used to lift loads vertically.

The output power of the crane to lift a car is P.

The crane then lifts a lorry, which has 3.0 times the weight of the car, through 0.25 of the distance in 0.50 of the time.

What is the output power of the crane now?

A $\frac{3P}{8}$ **B** $\frac{3P}{2}$ **C** $\frac{8P}{3}$ **D** $6P$

www.root19.com +91 - 9969 353 391

12 The diagram shows a manometer connected to a gas supply.

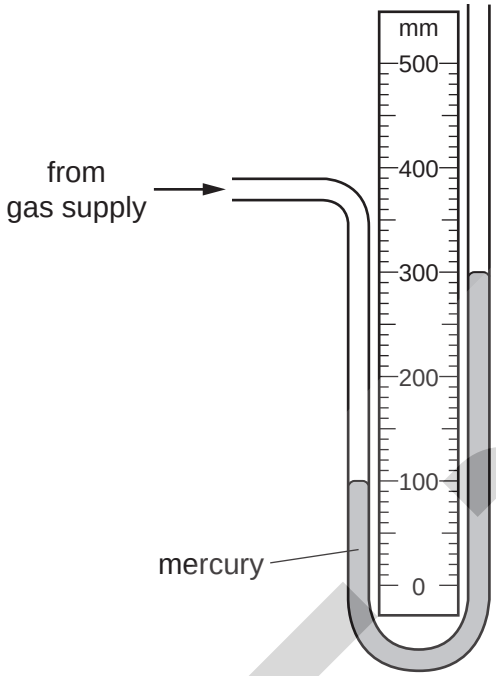

What is the pressure of the gas supply?

A 100 mm Hg above atmospheric pressure

B 100 mm Hg below atmospheric pressure

C 200 mm Hg above atmospheric pressure

D 200 mm Hg below atmospheric pressure

13 The diagram shows a box of dimensions 6.0 cm × 8.0 cm × 4.0 cm.

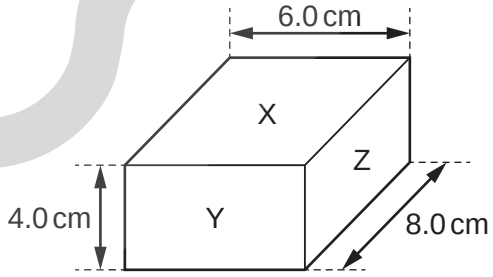

The box rests on a flat horizontal surface.

On which face must the box rest in order to exert the least pressure?

A face X

B face Y

C face Z

D The pressure is the same for all the faces.

www.root19.com +91 - 9969 353 591

14 Air in a sealed syringe is slowly compressed by moving the piston. The temperature of the air stays the same.

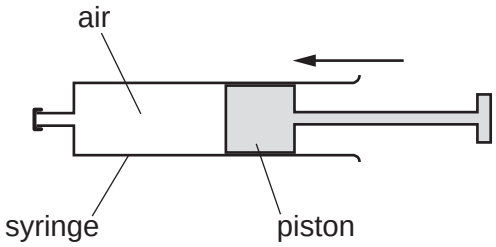

Which statement about the air is correct?

A The pressure of the air decreases because its molecules now travel more slowly.

B The pressure of the air decreases because the area of the syringe walls is now smaller.

C The pressure of the air increases because its molecules now hit the syringe walls more frequently.

D The pressure of the air increases because its molecules now travel more quickly.

15 In an experiment, smoke particles are suspended in air and viewed through a microscope.

The smoke particles move about with short random movements.

Which of the following statements is correct?

A Air particles have large masses compared to smoke particles and they move in one direction only.

B Air particles have large masses compared to smoke particles and they move in random directions.

C Air particles move at high speeds compared to smoke particles and they move in one direction only.

D Air particles move at high speeds compared to smoke particles and they move in random directions.

© UCLES 2021
www.root19.com

+91 - 9969 353 391

16 The graph shows how the internal energy of 1.0 kg of a metal changes with temperature.

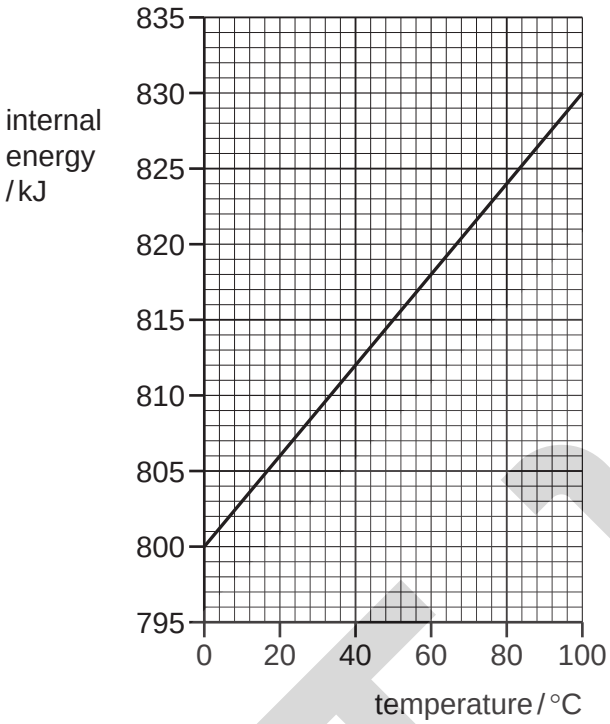

What is the increase in the internal energy of a block of the same metal of mass 0.25 kg when its temperature rises from 40 °C to 50 °C?

A 30 J **B** 300 J **C** 750 J **D** 1200 J

17 A piece of melting ice at 0 °C and a beaker of boiling water are both in a laboratory. The laboratory is at 20 °C.

What is happening to the temperature of the melting ice and what is happening to the temperature of the boiling water?

	temperature of melting ice	temperature of boiling water
A	constant	constant
B	constant	increasing
C	increasing	constant
D	increasing	increasing

www.root19.com +91 - 9969 353 591

18 One end of a copper rod is heated.

What is one method by which thermal energy is transferred in the copper rod?

A Free electrons transfer energy from the cooler end to the hotter end.

B Free electrons transfer energy from the hotter end to the cooler end.

C Molecules of copper move from the cooler end to the hotter end.

D Molecules of copper move from the hotter end to the cooler end.

19 Which change will cause a decrease in the rate of radiation emitted by an object?

A changing the surface colour from white to black

B changing the surface texture from dull to shiny

C increasing the surface temperature

D increasing the surface area

20 What is the approximate wavelength in air of the highest frequency sound that can be heard by a normal healthy person?

A 0.02 m **B** 60 m **C** 20 000 m **D** 7 000 000 m

21 What causes the change in direction when light travels from air into glass?

A The amplitude of the light changes.

B The colour of the light changes.

C The frequency of the light changes.

D The speed of the light changes.

22 Light from a torch is incident on a plane mirror. The angle of incidence is 38°.

What is the angle of reflection?

A 38° **B** 52° **C** 76° **D** 142°

© UCLES 2021
www.root19.com

+91 - 9969 353 391

23 Two rays with an angle of incidence of 60° pass into dilute and concentrated sugar-water solutions. The refractions are shown.

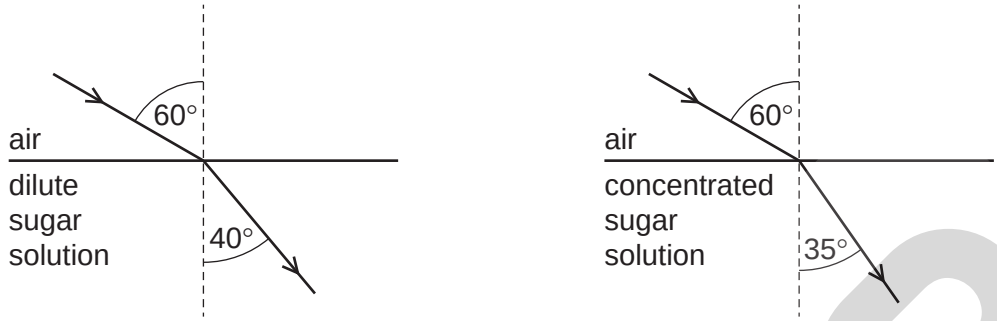

Which row is correct?

	refractive index as concentration increases	speed through solution as concentration increases
A	decreases	decreases
B	decreases	increases
C	increases	decreases
D	increases	increases

24 A thin converging lens is used to produce a sharp image of a candle.

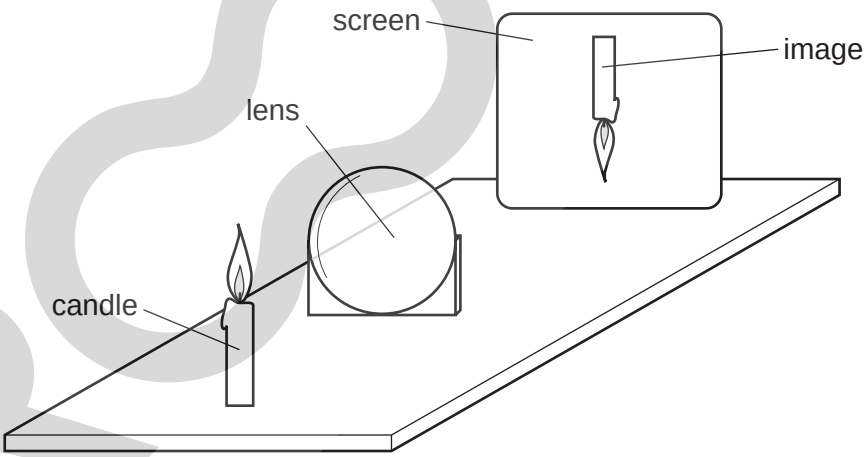

Various sharp images are produced on the screen by moving the lens and the screen backwards and forwards.

Which statement is **always** correct?

A The image is at the principal focus (focal point) of the lens.

B The image is bigger than the object.

C The image is closer to the lens than the object.

D The image is inverted.

www.root19.com +91 - 9969 353 591

25 Which row gives the approximate speeds at which ultraviolet waves travel in air and in a vacuum?

	speed in air m / s	speed in a vacuum m / s
A	340	3.0×10^8
B	340	340
C	3.0×10^8	340
D	3.0×10^8	3.0×10^8

26 The diagram represents a sound wave.

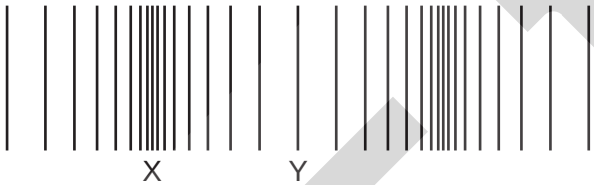

What are the names of the parts of the sound wave labelled X and Y?

	X	Y
A	amplitude	wavelength
B	compression	rarefaction
C	rarefaction	amplitude
D	wavelength	compression

27 The speed of sound is different in different states of matter.

The speed of sound in liquid water is 1500 m / s.

Which row correctly compares the speed of sound in ice and the speed of sound in water vapour with the speed of sound in water?

	speed of sound in ice m / s	speed of sound in steam m / s
A	less than 1500	less than 1500
B	less than 1500	more than 1500
C	more than 1500	less than 1500
D	more than 1500	more than 1500

© UCLES 2021
www.root19.com

+91 - 9969 353 391

28 Three methods to demagnetise a magnet are suggested. The magnet is in an east-west direction.

1 hitting the magnet repeatedly with a hammer

2 heating the magnet until red hot

3 withdrawing the magnet from a coil which has a direct current (d.c.) in it

Which methods demagnetise the magnet?

A 1, 2 and 3 **B** 1 and 2 only **C** 1 and 3 only **D** 2 and 3 only

29 Three cores of different metals P, Q and R are placed inside identical coils of wire.

At least one of the metals is non-magnetic.

The cores are held above some iron nails.

The three diagrams show what happens when there is a current in the coils.

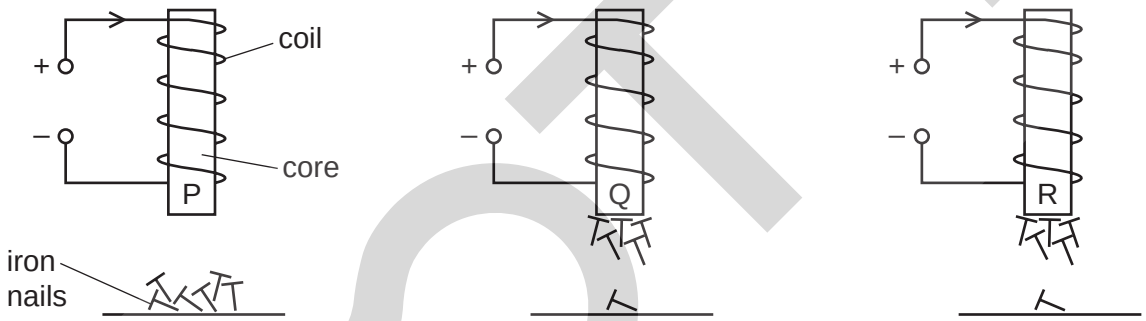

The three diagrams below show what happens when the current is then switched off.

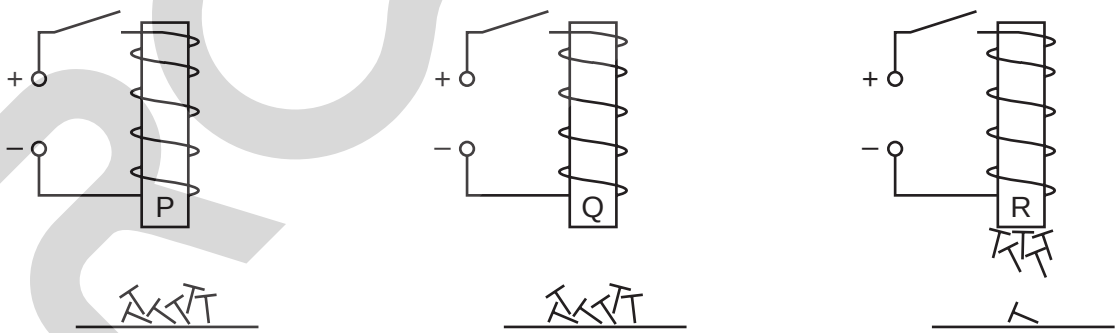

Which core metals are magnetic?

A P only **B** R only **C** P and Q **D** Q and R

www.root19.com +91 - 9969 353 591

30 Two uncharged metal spheres X and Y rest on insulating stands and touch each other. A negatively charged plastic rod is brought near to sphere X.

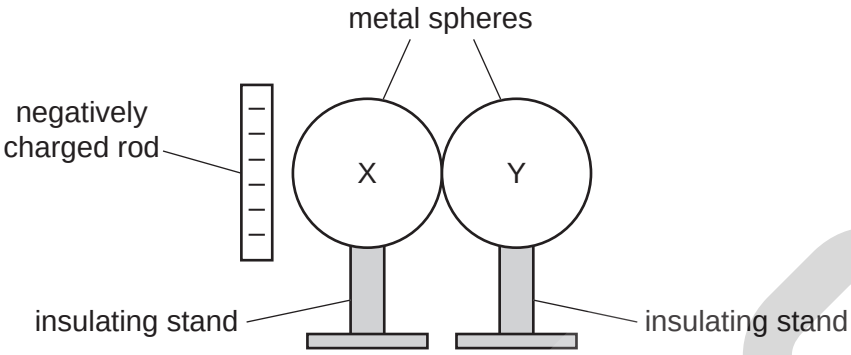

Using the insulating stand, sphere Y is moved away from sphere X.

What are the signs and the relative magnitudes of the charges induced on X and Y?

	charge on X	charge on Y	relative magnitudes of charges
A	negative	negative	equal
B	negative	positive	different
C	positive	negative	equal
D	positive	positive	different

31 Which two changes to a metal wire both decrease its resistance?

	length of wire	cross-sectional area of wire
A	decrease	decrease
B	decrease	increase
C	increase	decrease
D	increase	increase

32 There is a current I in a resistor of resistance R for a time t. The potential difference across the resistor is V.

Which equation gives the energy E transferred by the resistor?

A $E = IR$ **B** $E = IV$ **C** $E = IRt$ **D** $E = IVt$

www.root19.com +91 - 9969 353 391

33 A resistor R is connected in parallel with an 8.0 Ω resistor. The resistance of this combination is 4.0 Ω.

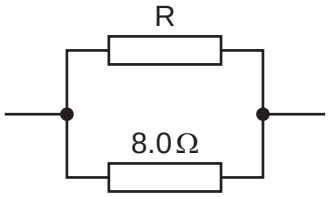

What is the resistance of resistor R?

A 0.50 Ω **B** 2.0 Ω **C** 4.0 Ω **D** 8.0 Ω

34 A student designs a circuit to use as a dimmer switch for a lamp.

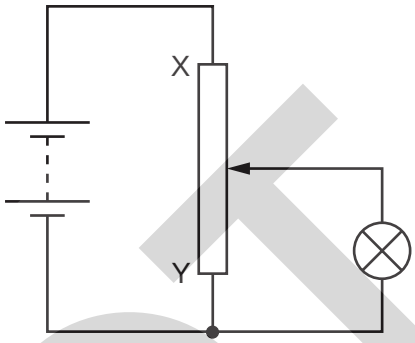

What happens to the brightness of the lamp and the potential difference (p.d.) across the lamp, when the slider is moved from X to Y?

	brightness of lamp	p.d. across the lamp
A	decreases	decreases
B	decreases	increases
C	increases	decreases
D	increases	increases

www.root19.com +91 - 9969 353 591

35 The circuit shown contains two gates.

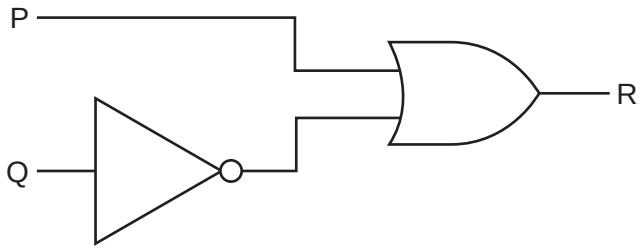

Which truth table describes the operation of the circuit?

A

P	Q	R
0	0	0
0	1	1
1	0	1
1	1	1

B

P	Q	R
0	0	0
0	1	0
1	0	1
1	1	1

C

P	Q	R
0	0	1
0	1	0
1	0	0
1	1	0

D

P	Q	R
0	0	1
0	1	0
1	0	1
1	1	1

36 The diagram shows an electromagnet near a coil of wire connected to a voltmeter. The reading on the voltmeter is zero.

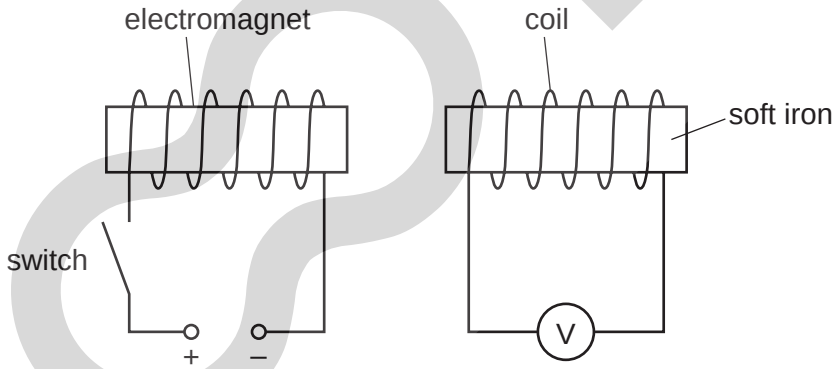

The switch is closed. The electromagnet magnetises quickly.

What happens to the reading on the voltmeter?

A It keeps increasing.

B It quickly increases and stays at maximum.

C It quickly increases and then decreases.

D It stays on zero.

www.root19.com +91 - 9969 353 391

37 Which graph shows the voltage output of an a.c. generator with the peaks and zeros correctly labelled?

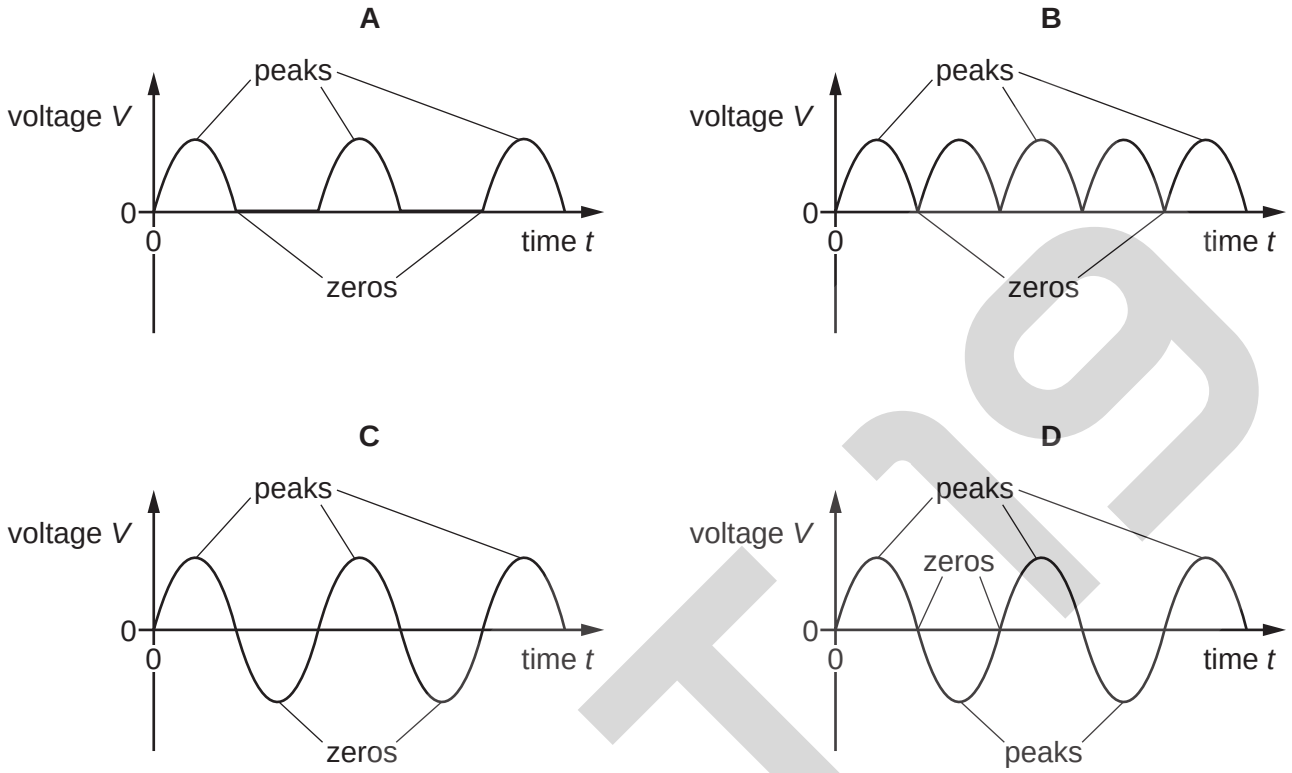

38 Three students are describing the structure of an atom.

student 1	All the positively charged particles are in the nucleus.
student 2	Positive electrons are in the nucleus.
student 3	Negative electrons orbit around the nucleus.

Which students are making a correct statement?

A 1, 2 and 3 **B** 1 and 2 only **C** 1 and 3 only **D** 2 and 3 only

39 When alpha particles are incident on a thin metal foil, most of them pass through undeviated.

What does this observation reveal about the nature of the atom?

A The atom has a dense nucleus.

B The atom is mostly empty space.

C The atom is very small.

D The nucleus of the atom is positively charged.

www.root19.com +91 - 9969 353 591

40 A laboratory worker measures the count rate from a radioactive source. He records his results in a table.

time / minutes	count rate / counts / s
0	100
1.0	73
2.0	54
3.0	41
4.0	31

The average background radiation in the laboratory is 8 counts per second.

What is the half-life of the source?

A 1.5 minutes

B 2.0 minutes

C 3.0 minutes

D 4.0 minutes

Permission to reproduce items where third-party owned material protected by copyright is included has been sought and cleared where possible. Every reasonable effort has been made by the publisher (UCLES) to trace copyright holders, but if any items requiring clearance have unwittingly been included, the publisher will be pleased to make amends at the earliest possible opportunity.

To avoid the issue of disclosure of answer-related information to candidates, all copyright acknowledgements are reproduced online in the Cambridge Assessment International Education Copyright Acknowledgements Booklet. This is produced for each series of examinations and is freely available to download at www.cambridgeinternational.org after the live examination series.

Cambridge Assessment International Education is part of the Cambridge Assessment Group. Cambridge Assessment is the brand name of the University of Cambridge Local Examinations Syndicate (UCLES), which itself is a department of the University of Cambridge.